MegaLife

FICHE D'INSTALLATION

Pompe à chaleur DC Inverter Monoblock 10KW

BKDX30-95I/1/S

Please read this manual carefully before installation operation

Applicable models：

Keep this manual for future reference

NERS-BS Series

CONTENT

Please read this manual carefully before using our products. And please install and operate the machine in accordance with this manual, otherwise,we will not responsible for any loss.

◆ This heat pump water heater must be installed by the professional technical personnel.

◆ Please install the machine and connect the water pipe in accordance with this manual strictly.

◆ Please arrange the professional personnel to connect the electrical circuit. The machine must be grounded with corresponding leakage switch. For safety, please make sure to recheck everything is well before power on.

◆ When machine is operating, please prevent electric shock, pipeline and temperature sensor damage. We will not responsible for any loss caused by above reason. If the machine has any improvement, the content is subject to change without notice.

Please keep this manual for future reference .

I. Prologue

● Thanks for using New Energy air source heat pump water heater! Please read this manual carefully before installation and operation. there are information for installation、operation、maintenance、commissioning…

● High design and production standard make sure New Energy air source heat pump water heater running safely and efficient as well as excellent reliability and adaptability.

● We will not responsible for any loss caused by any nonstandard operation.

● The machine should be installed by qualified professional personnel and must be connected according to the circuit diagram on the machine. The following items should be focused:

1. Before installation, please confirm if your local voltage is match with the voltage showed on the machine's nameplate and if the carrying capacity of the power supply,wires and sockets are suitable for this machine's input power.

2. Users are not allowed to change the power cord or socket. Wiring work must be carried out by a qualified electrician and ensure that the metal part of the machine has a good grounding. Changing the ground mode is strictly forbidden.

3. After the completion of the construction of all wiring work, please make sure to recheck everything is well before power on.

4. Installing the machine in the place which the combustible gas may leak is strictly forbidden.

5. Do not put your hands or foreign objects into the air outlet of heat pump unit,otherwise, it will be dangerous to the people and equipment

6. In order to obtain a better energy-saving effect, the unit should be installed in a place with well-ventilated.

7. Water used for this machine must be accordance with the national standard of living water, otherwise, if the machine is damaged, we will not assume any responsibility.

II. Parameters

1.Parameters

Model	**Size (length*width*height)mm**	**N.W. / G.W.(kg)**	**Power source**
NERS-B5S	1108×489×1257	138/143	380V 3N～50Hz

2. Appearance

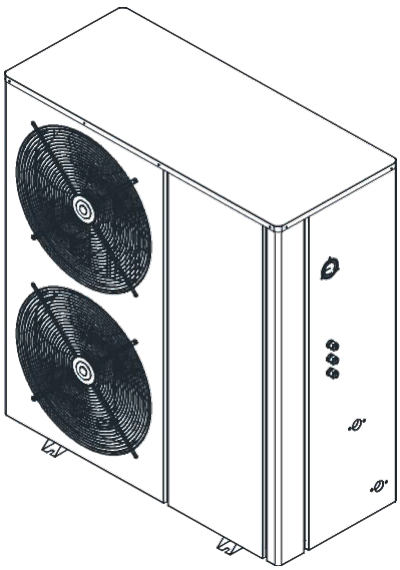

NERS-B5S

3. Attention

3.1 please read the manual carefully before installation and using. It included all information related to correct installation, debugging, operation, and maintenance.

3.2 following the design standard strictly under producing, which can make sure the unit stay in safe, high quality state, and provide high reliability and excellent adaptation.

3.3 we assume no responsibility to any personal harm or machine damage which caused by improper debugging, unnecessary maintenance, non-compliance to manual and guidance.

3.4 The maximum water temperature is 80℃,When you use the water, please adjust the water temperature to a appropriate temperature (The most comfortable water temperature for body is 38~42℃, if the water temp above 50℃, there will be danger of burns!)

3.5 If the unit power off, please discharge all the water inside the unit to avoid heat exchanger frozen in winter, otherwise, no guarantee within warranty.

III. Main introduction of product

1.Detail parameters

Item	BS series
Model	NERS-B5S
Level of security	IPX4
Electric shock protection grade	I
Rated power	380V～3N～50Hz
Rated water volume	420L/h
Rated heating capacity	19700W
Rated input power/ current	4450W/8.0A
Max input power/ current	6408W/11.4A
Refrigerant/ injection volume	R134a/3250g
Rated water temp	75℃
Max water temp	80℃
Rated water flow	5.0m³/h
Inlet/outlet water pressure drop	50KPa
unit net weight	138kg
noise	≤60dB(A)
Max allowable pressure of heat exchanger	3.0MPa
Max allowable pressure of inlet/outlet	3.0MPa
Max allowable pressure of high/low pressure	3.0MPa

2.Dimension

2.1 NERS-B5S

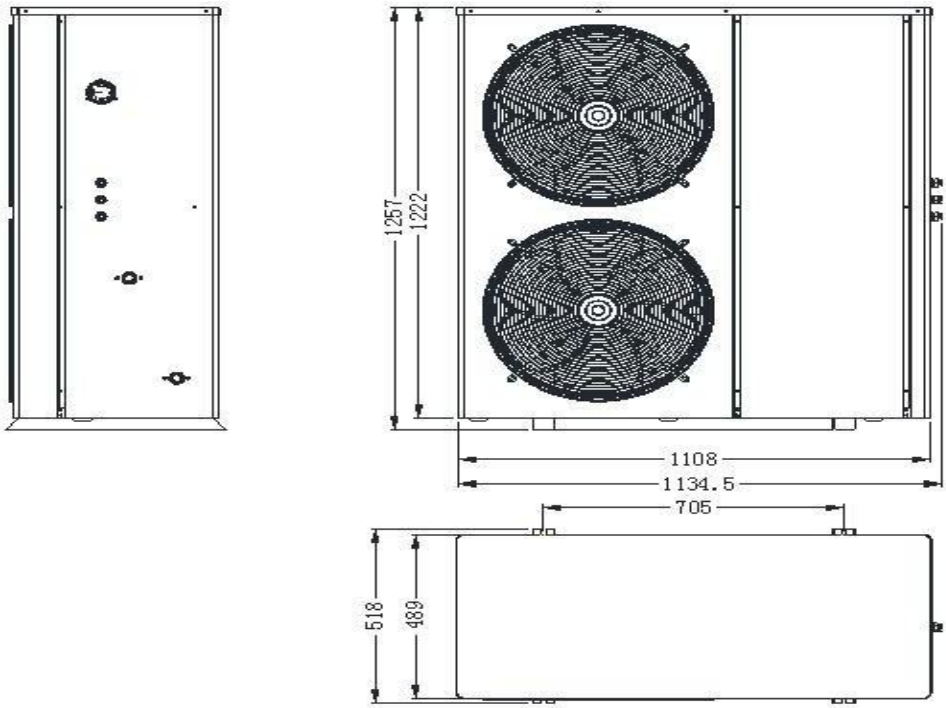

IV. Installation

1.Installation

1.1 Installation

a. The place should have enough space for installation & maintenance

None block to the air inlet and outlet and none strong wind or hurricane could reach

b.The place should well-ventilate ,solid, there should be no extra running noise or vibration noise after loading the unit

c. The place which has enough space for air outlet, which doesn't have combustible gas leakage

d.Snow shelter is needed in winter.

e. There should be drainage channel around the unit for drain condensate water. g.The place should convenient for wiring and plumbing work.

h. Typhoon protection &lightning protection must be done when loading a unit on the roof.

i.Don't install controller in bathroom, otherwise, it may affect the unit running if get humid.

j.Enough space around the unit, like this:

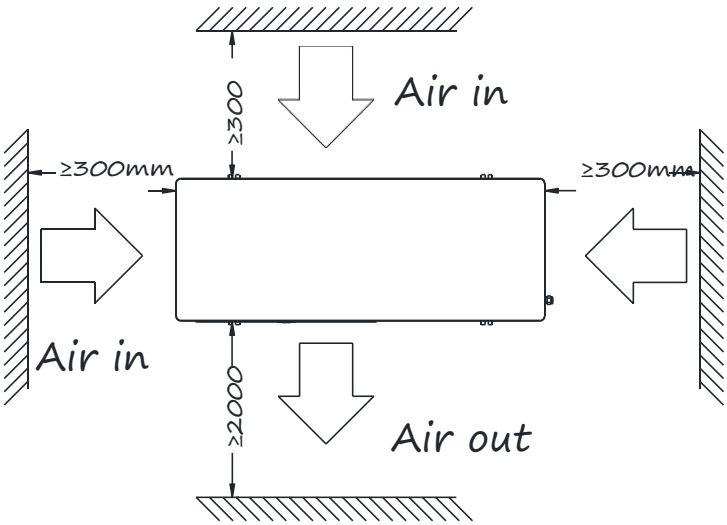

1.2 Attention

Incorrect installation in the following places:

a.The place has cutting oil or other mineral oil

b.The place close to the sea or have much salty air.

c. The place have much sulfur gases, acidic or alkaline corrosive gas, such as the hot spring area.

d. The place has strong electromagnetic wave or the factory with serious power supply voltage fluctuation.
e. The place is full of oil and gas and oil slick, such as kitchen.

1.3 Unit's base installation

The base installation of heat pump can be concrete, steel structure, or design a flat foundation structure according to unit weight, please see the data in the manual, anti-vibration rubber should be taken into account, and the unit should be fixed firmly by expansion blots, then adjusting horizontal installation to decrease it's inclination (<2 degrees). and water drainage should be available near the installation located for draining water in an effective way.

1.4 Circulation pipe selection

Selection for unit's plumbing system

Circulation pipe's size should be as big as the unit inlet and outlet or not smaller than the unit inlet and outlet in mono unit system, pipe selection as follow in multiple unit system:

Formula: $G=\pi r^2 v$

G: water flow rate m^3/h r: Pipe diameter π: circumference ratio 3.14 v: water velocity（1.5—2.0m/s)

Pipe selection ex:

3sets NERS-B5S connect parallel, calculate the main pipe diameter needed?
From: G=Q(Kcal)/△T
=19700÷3=6567(L/h)
Then: G total=6567×3=19701L/h=19.7(m^3/h)
$G=\pi r^2 v$
$19.7\div3600=3.14\times r^2\times2.0$
Then: $r^2=19.7\div3600\div3.14\div2.0$ r=0.0295(m)
Then: D=0.0295×2.0=0.059(m)

So we should select DN50 pipe

2. Piping diagram

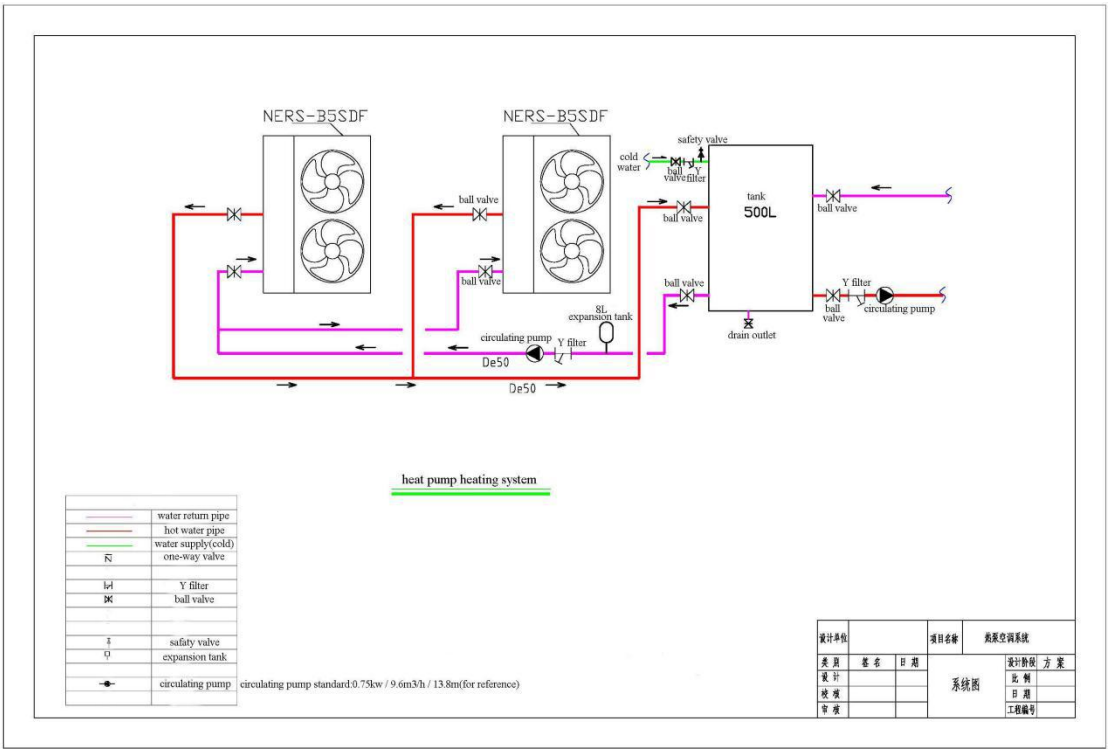

3. Circuit connection

3.1 Attention

a. The installation request qualified professionals connecting in accordance with the circuit diagram on unit.

b. The machine should be installed in accordance with national wiring rules.

c. Before installation, please confirm whether your local voltage matchs with the voltage showed on the machine's nameplate and whether the carrying capacity of the power supply, wires and sockets are suitable for this machine's input power.

d. In GB4706.32-2012, NO.27 rules Units installed outdoors power lines should not be lighter than polychloroprene sheathed flexible cord(In IEC 60245 with No. 57 line);power line specifications according to the nameplate rated maximum

current selection, as follows:

The minimum conductor cross-section	
Rated current/A	cross-section/mm
≤0.2	tinsel cord[a]
＞0.2&≤3	0.5[a]
＞3&≤6	0.75[b]
＞6&≤10	1.0(0.75)[b]
＞10&≤16	1.5(1.0)
＞16&≤25	2.5
＞25&≤32	4
＞32&≤40	6
＞40&≤63	10
A. The length of the wire and the wire protective sleeve is less than 2m that can use this type of wire. B. Wire length is no more than 2m, the portable appliance values in parentheses can be used	

e. Require insurance tube: Subject to the Material object.

f. Users are not allowed to change the power cord or socket. Wiring work must be carried out by a qualified electrician and ensure that the metal part of the machine has a good grounding. Changing the ground mode is strictly forbidden.

g. When do power connection, must be equipped with all-pole disconnect device and leakage

protection device which match the unit and have at least 3mm contact opening distance from power;If the power cord is damaged,in order to avoid dangerous, must be replaced by a professional manufacturer, its service department or similar departments.

h. Do not put your hands or foreign objects into the air outlet of heat pump

unit,otherwise, it will be dangerous to the people and equipment.

i. Wire remote control need to installed in more than 1.5M high indoor, prohibit install in place which is wet, rain, acid, corrosion resistance,and light shine directly.

j. Water used for this machine must be accordance with the GB standard of living water.otherwise, if the machine is damaged, we will not assume any responsibility.

3.2 Electric wiring diagram

3.2.1 NERS-B5S（380V）

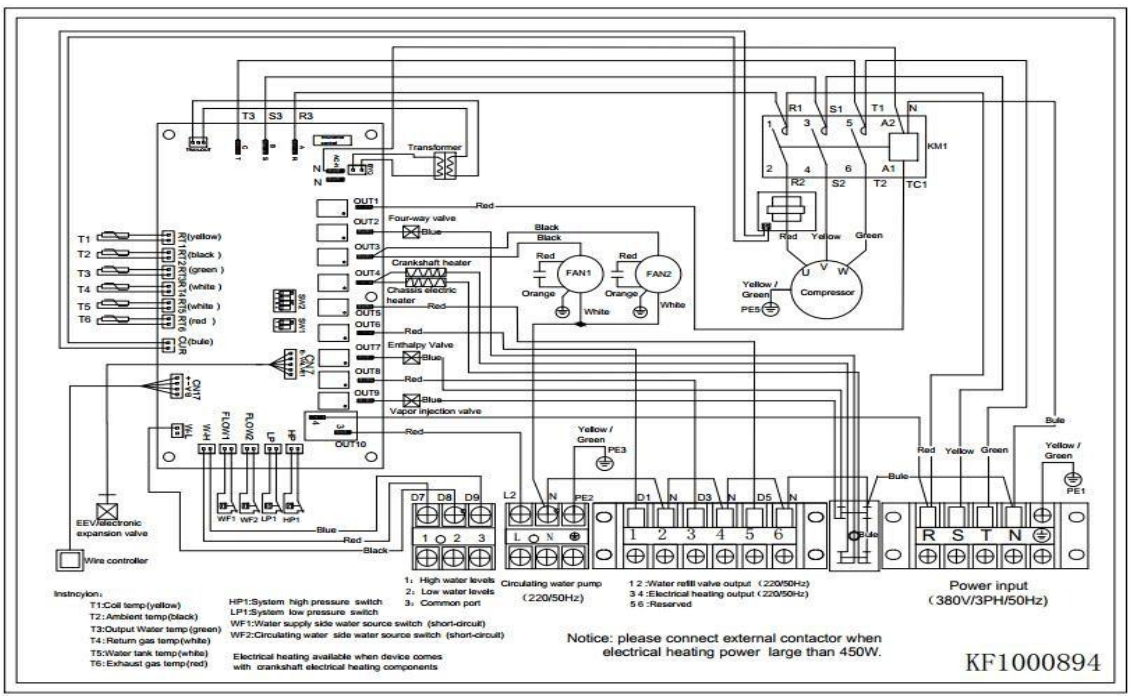

V. Trial operation

1.Check before operating

a. Trial running must come after all the installation is completed.

b. Please confirm the following matters before the trial operation, put "√"in the boxes after
confirmation:

● unit is installed correctly ☐ ● power supply meets unit's rated need ☐

● Piping and wiring correct ☐ ● Unit air inlet/outlet well-ventilated ☐

● Drain off water well ☐ ● leakage protective device act effectively ☐

● Pipe insulation is perfect ☐ ●Grounding wire connected correctly ☐ c.All wiring and piping construction work is completed,After carefully checking everything then can switch on,and the water tank fill with water.

d. Let the piping and water tank ’s air drain,click "on/off" button on the control panel,unit will accord to the set temperature operation.

e.Trial run to be checked:

- Unit’s gas system pressure is normal or not (according to the water temperature detect high, low pressure)
- Operation panel’s function keys are normal or not

  The indicator is normal or not

  The whole circulating hot water system whether there is water leakage

  The condensed water discharge is normal or not

  whether there is abnormal sound and vibration in unit running state

2.Control system instruction

2.1 Operation illustration

2.1.1 Display

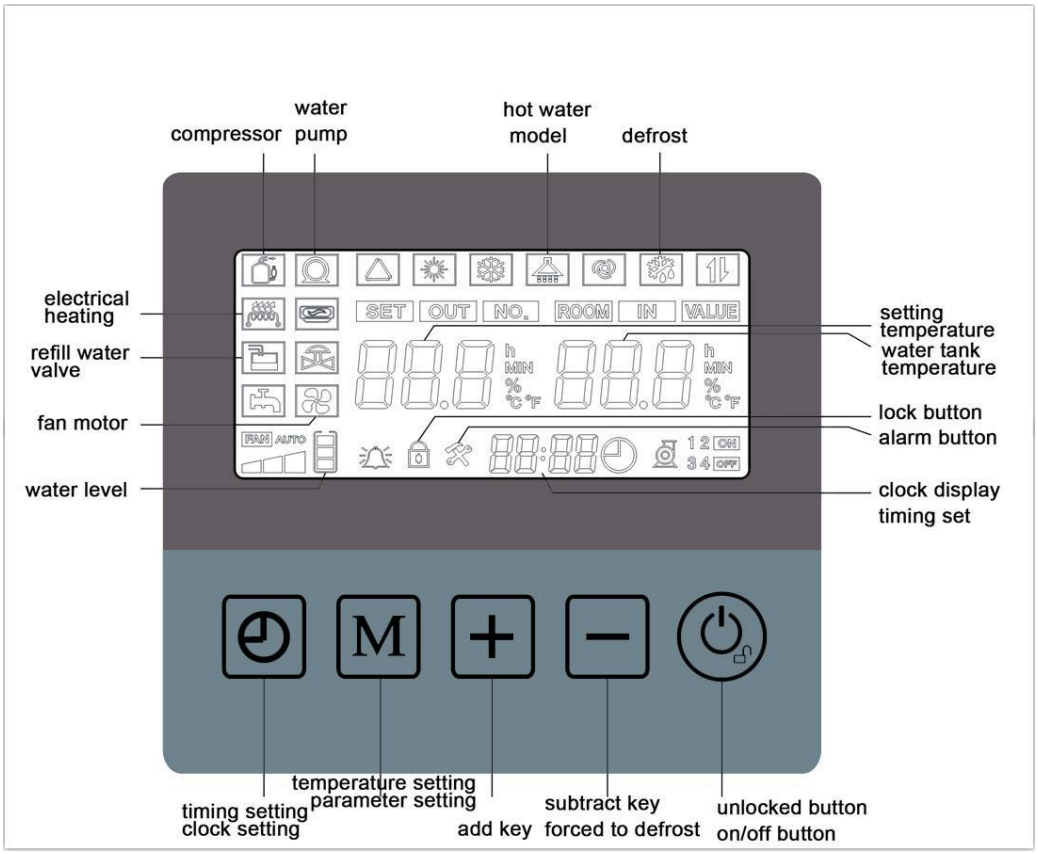

2.1.2 Key unlocked

Press "⏻" button for 5 seconds, the button is unlocked, the lock key icon extinguish, when no key operation for 120 seconds, the keys are automatically locked, key lock icon is displayed.

2.1.3 On/Off panel

Press ⏻" key for 2 seconds, if the panel was on mode then will turned off ; if the panel was off mode then will turned on.

2.1.4 Temperature setting

Press "M" button for 3 seconds to enter the user parameter P1 items,set water

temperature.

2.1.5 User parameter setting

Press " M " button for 3 seconds to enter the user parameter query, then press "+" or −" button to

select the parameter number,Press " M " to select the parameter content, then press " + " or " − " key to modify the parameter content,Press " " button to confirm and return to the view state.

User parameters:

parameter name	**Parameters No.**	**Factory settings**	**Min.**	**Max.**
Heating set temperature	P1	55	5	〖b8〗
Combination timing /cycle timing selection	P2	0	0:Combination timing (A valid within 24 hours)	1:cycle timing(Every 24 hours cycle operation)
Reserved	P3	-	-	-
Water refill set temperature	P4	42	5	Hot water set temperature

2.1.6 Parameter query

Press M" key to enter temperature checking state, press +" or −" button to select the parameter number,No button operation for 30 seconds or press ⏻" to exit Check status.

No.	**State Name**	Remark
d1	Outlet water temperature value	
d2	Water tank 1 temperature value	
d3	Outdoor ambient temperature value	
d4	Coil 1 temperature value	
d5	Coil 2 temperature value	
d6	Exhaust 1 temperature value	

d7	Exhaust 2 temperature value	
d8	Reserved	
d9	Recoverable fault code	
d10	Motherboard "mode selection" switch code	
d11	Motherboard "unit selection" s witch code	
d12	Electronic expansion valve 1 value	
d13	Electronic expansion valve 2 value	(Reserved)
d14	Air return 1 temperature value	
d15	Air return 2 temperature value	(Reserved)

2.1.7 Time settings

Press "⏲" button for 5 seconds to enter the clock setting, the hour part blinking, then press "+" or "−" button to adjust the hour part, then press "⏲" button to enter the minute setting, the minute part blinking, then press "+" or "−" button to adjust the minute part,Press "⏲" key, the clock is finished.

2.1.8 Timer setting

a.Setting parameters [P2] is 0, expressed as a combination timing:

When On mode, press the "⏲" key, set the timer off

When Off mode, press the "⏲" key, set the timer on

Press "⏲" button to enter the clock setting, the hour part blinking, then press "+" or "−" button to adjust the hour part, then press "⏲" button to enter the minute setting, the minute part blinking, then press "+" or "−" button to adjust the minute part

Press "⏲" key, Timing set up and save.

Press "⏲" key again, Timing set up cancel

b.Setting parameters [P2] is 1, expressed as a cycle timing:

After Press "⏲" button, the timing on and hour part blinking, then press "+" or "−" to adjust the hour part

After Press "⏲" button, the timing on and minute part blinking, then press "+" or "−" to adjust the minute part

After Press "⏲" button, the timing off and hour part blinking, then press "+" or "−" to adjust the hour part

After Press "⏲" button, the timing off and minute part blinking, then press "+"

or "⊟" to adjust the minute part
Press ⊙" key, Timing set up and save
Press ⊙" key again, Timer set up cancel

2.1.9 Forced defrost

When the system is switched on and the compressor starts, press the ⊟" button for 5 seconds,the system enters defrost, when the coil temperature reach or defrosting time is over,then will exit defrosting model.

2.1.10 Water temperature control

Water temperature control area:the temperature control object is water tank temperature control, [b8] is water tank set temperature upper limit of [P1].

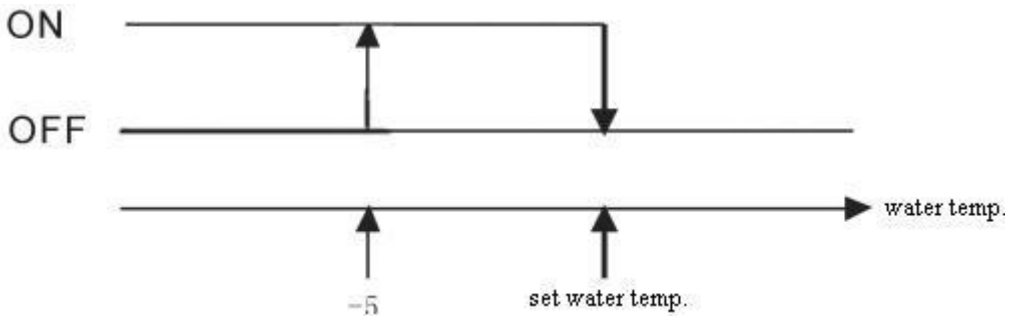

2.1.11 Compressor control

When actual measurement tank temperature≤ set temperature[b8] - hysteresis temperature[be],the compressor is turned on,when the measured water temperature ≥ set temperature[b8], the compressor is turned off.

2.1.12 Circulating water pump control

When turned on, circulating pump 50 seconds ahead of the compressor start up;when it is shutdown, circulating pumps delayed 30 seconds to stop.

2.1.13 Outdoor fan motor control

When turned on, the outdoor fan starts 5 seconds ahead of the compressor, defrost state or shutdown state ,the outdoor fan motor will stop.

2.1.14 Four-way valve control

Defrost state, the four-way valve start working, after exiting the defrosting, the four-way valve will stop working.

2.1.15 Refill water valve control

When the high and low level switches are turned off, refill water valves are opened;In the refill water process, the low-water level turned on, determine actual water tank temperature, when the measured water tank temperature ≥ parameters P4, start refill water valve,when the measured water tank temperature ≤ parameters P4 - (bC), turned off refill water valve; when the water high level valve is turned on,refill water valve close.

2.1.16 Water flow switch protection

After water circulating pump starts to run 10 seconds, if the water flow switch is off 10 seconds state, the crew stopped immediately,and the controller panel will display error code E1:02, after 3 minutes will start the water pump;If in 30 minutes,continuous to appear 3 times with the fault, it will lock, and power source must be restored.

2.1.17 High pressure switch protection

After power on for 30 seconds,if high pressure switch disconnected continually for more than 10 seconds,then the unit immediately stop running. and controller display error code E1： 31, after the high pressure switch recover and the compressor delayed start after 3 minutes, If fault happen 3 times in 60 minutes then lock the unit and power off to recover the unit.

2.1.18 Phase-sequence protection

When MPU SW1 plucking number switch 1 is OFF, meaning the unit is a single-phase power supply, not to detect phase sequence protection; when SW1 plucking number switch 1 is ON, Expressed as a three-phase power supply unit, and detects phase sequence protection, If the phase sequence failure occurs, the unit will be disable the output of all components, and controller display fault code E1: 01.

2.1.19 Winter antifreeze protection

In winter, to prevent water pipes and water pumps freezing burst,in thermostats or shut down state,frost protection automatically when the unit meets the following conditions:

A, when the ambient temperature≤4 ℃ and the water temperature≤10 ℃, enter frost protection, controller display E1: 44 alarms; If the water circulating pump continuous in power off and longer than 30 minutes,After water circulating pump starts running 3 minutes then power off, cycle operation;

B, when the ambient temperature is ≤2 ℃ and the water temperature is <4 ℃,the machine will run and start to heat,enter frost protection,controller display E1: 44 alarms;

C, when the ambient temperature ≥4 ℃, exit level two frost protection.Until ambient temperature ≥6 ℃ or water temperature ≥15 ℃ to exit level one antifreeze.

2.1.20 Compressor high temperature protection

After the compressor starts to run 1 minute, 5 seconds if continuously detected exhaust temperature T5≥115 ℃, then into the exhaust high temperature protection, the unit immediately stop running and controller error code E1: 21; When the exhaust temperature T5≤95 ℃, the error recovery, and the compressor delay 3 minutes to restart.If in 60 minutes,continuous to appear 3 times with the fault, it will lock, and power source must be restored.

2.1.21 Current protection

After the compressor starts,detection operation current,when the measured current continuous 10 seconds ≥ parameters (C7) current setting, then enter into current protection, the unit immediately stop running and controller display error code E1: 07,If in 60 minutes,continuous to appear 3 times with the fault, it will lock, and power source must be restored.

3.Maintenance

3.1 Using a stiff nylon brush to clean the evaporator wings. Before scrub, clean it with vacuum cleaner. If there is compressed air, you can use high pressure air to clean the condenser or evaporator.

3.2 Periodic inspecting if the air inlet or outlet is stopped up.

3.3 Pay close attention to the outlet, inlet/ suction pressure of the system. If there is any abnormity, find out the reason and clearing the fault.. If you can not determine the reason, get in touch with the technician or New energy.

3.4 Periodic inspecting the electrical connections and regularly monitored the operating voltage, operating current and phase balance. Timely to check the reliability of the electrical components, replace the expired and unreliable parts timely.

3.5 Air source heat pump water heater uses NEW ENERGY patent heat exchanger and the outlet water temperature is high. After long time operation, the heat transfer surface of the water side heat exchanger will be deposited calcium oxide or any other minerals. If these minerals fouling too much on the heat transfer surface, it will effect heat transfer performance which could lead to power consumption increase, compressor outlet pressure too high or inlet pressure too low. So regular contaminant separation is necessary (Please use formic acid, citric acid, acetic acid and other organic acid to clean, any cleaning agents contains chloral acid or fluoride is strictly forbidden).

3.6 Do routine maintenance work can make more efficient use of heat pump water heaters, while for failure problems can find in time, to avoid unnecessary trouble.

4. Error code and solution

4.1 Description of the error code

Code	description	Code	description
E1：01	Phase-sequence protection	E1：14	Coil 1 temperature sensor failure
E1：02	Water flow switch off protection	E1：16	Exhaust gas temperature sensor fault
E1：03	Level switch broken (high water level pull, low water level off)	E1：19	Return air 1 temperature sensor fault
E1：04	Outlet water high temperature protection	E1：21	Exhaust gas high temperature protection
E1：05	Down water flow switch off protection	E1：31	High voltage switch 1 fault
E1：07	Current fault	E1：41	Low voltage switch 1 fault
E1：09	Communication fault	E1：43	Anti-high temperature and unit crash functional protection
E1：11	Outlet water temperature sensor fault	E1：44	Frost protection
E1：12	Water tank 1 temperature sensor fault	E1：88	Electronic expansion valve expansion board communication failure
E1：13	Ambient temperature sensor failure		

4.2 Solutions

phenomenon	reason	check	clear
The machine does not work, operation panel with a display But can not be switched, button is failure	1: Operation panel line not connected; 2: Operation board is broken; 3: Disturbed; 4: Voltage Low; 5: The electronic control board is broken	1: Check the line; 2: Alternative Method; 3:Check the source of interference; 4: Check the line voltage; 5: Alternative Method	1: Connect the line; 2: Change operation panel; 3: Eliminate interference source replace line (with shield); 4: Transformation of the line or increase Regulators; 5: Change electronic control board
The machine does not work, the operation panel without display	1: Transformer is broken; 2: Operation plate line not connected; 3: Operation board is broken; 4: The electronic control board is broken	1: Measuring with a multimeter; 2: Check the line; 3: Alternative Method; 4: Alternative Method;	1: Replace the transformer; 2: Connect the line; 3: Change the Control Panel; 4: Change electronic control board;
Fan does not work, and without supply input	1: Power outages; 2 Circuit breaker; 3:The electronic control board is broken (no output); 4: Transformer is broken	1: Measuring line voltage; 2: Measuring line; 3: Measure the output voltage; 4:Measuring with a multimeter	1: Wait to restore power; 2: Connect the line; 3: Change electronic control board; 4: Change transformers
Fan does not work, capacitor is broken	1:Capacity becomes smaller; 2: Open circuit; 3: Short circuit;	1: Check the capacity of the capacitor; 2: Measuring with a multimeter; 3: Measuring with a multimeter	1: Change capacitor;
Fan does not work, motor breaks down	1: The motor winding road blocking, short circuit, ground wiring	1: measuring winding	1: Change motor

Compressor does not work, the compressor terminals without power (electric control panels no voltage output)	1: No Power; 2: Set the temperature lower than the water temperature; 3:The electronic control board is broken; 4: Transformer is broken; 5: power outages	1: Check the operation panel; 2: Check the set temperature; 3: Alternative Method; 4: Alternative Method; 5: Measuring line voltage	1: Power on; 2: Reset temperature; 3: Change electronic control board; 4: Change transformers; 5: Wait to restore power
Compressor does not work, when the type of external overload protection	1: Capacitors is broken; 2:External overload is broken	1: Check the capacity of the capacitor; 2: Measure the resistance protection	1: Change capacitor; 2: Change overload protection
Compressor does not work, when the type of inside overload protection	1: Too little refrigerant 2: Low voltage; 3:The compressor cylinder block; 4:Compressor short of engine oil，wide noise, temperature rise quick	1: Measured pressure, current, water temperature parameter; 2: Measuring Voltage; 3: Measuring pressure, current, water temperature parameter; 4: Listen to the noise, measured compressor temperature	1: Charging refrigerant; 2: Transform line or increase regulators; 3: Parallel capacitance rushed to open, add frozen oil; 4: Add frozen oil

Unit does not defrost, defrost effect poor	1:Defrost temperature sensor loose; 2:Defrost temperature sensor is installed at no frost place; 3: Defrost detection takes too long time; 4:Defrost condition setting inappropriate; 5:Four-way valve does not operate,the four-way valve coil is broken; 6:Four-way valve does not operate, the four-way valve stuck; 7:Four-way valve gas carry-over; 8:The electronic control board is broken	1: Check the defrosting sensor connection; 2: Inspection; 3: Check of defrost operation time; 4: Defrost temperature set point is too high; 5: Measuring winding; 6: Knocking four-way valve; 7: Check four-valve-pipe temperature, measuring the current / pressure and other parameters; 8: Forced defrost, to see whether the electronic control board has electrical output	1: Replace the sensor; 2:Adjust the mounting position; 3: Reset the time; 4:Adjust the temperature point; 5: Replace the coil; 6:Replace the four-way valve; 7: Replace the four-way valve; 8: Replace the control board

MegaLife